samsara

AG15 Installation Guide

Kit Contents

- AG15 trailer-tracking asset gateway with included power harness
- Self-tapping screws
- Zip ties

Additional required hardware (not included)

- 2 ring terminals
- For reefer installation: inline fuse (3 amp minimum)

Mounting the AG15 to trailer nose

1. Place the AG15 on the forward facing bulkhead, between studs. The top of the AG15 should have a clear view of the sky, with the harness facing down.
   Dry van: Place the AG15 above the J560 receptacle
   Reefer: Place the AG15 to either side of the reefer unit
2. Secure the AG15 using four supplied self-tapping screws.
3. Plug the included power cable into the AG.

Flatbed, chassis, tanker, and unconventional installations: Please contact Samsara support at www.samsara.com/support

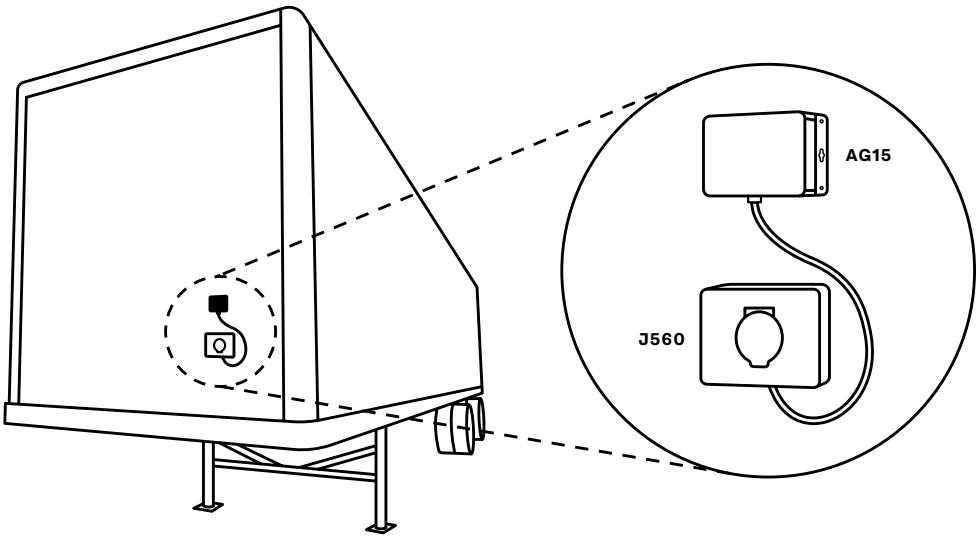

Dry van installation with power harness routed through J560's built-in cable grommet

Connecting to 7-way

4. Choose the best method of routing the power harness to your trailer's 7-way.

   Option 1: Route the cable harness along the front bulkhead and into the j560's built-in cable grommet. Cut any excess cable length (do not coil). Secure wiring harness to trailer using zip ties.

   Option 2: Drill a hole in the trailer near the AG15 and run the cable harness into the back of the j560 housing.

5. Open j560 housing and identify Ground (pin 7, marked "BLU") and Aux (pin 1, marked "WHT") power connections. See connection pin diagram illustrated below. Connect the AG15 blue lead to Aux power (pin 7) and the white lead to ground (pin 1).

6. Apply power to the trailer.
   Note: AG will operate in real time when power is applied to the 7-way. When power is not available via the 7-way, AG will run off of internal battery in power-save mode (periodic checkins, not real time)

7. Visit the Samsara dashboard on an internet-connected computer or device to verify that the AG15 is successfully connected.

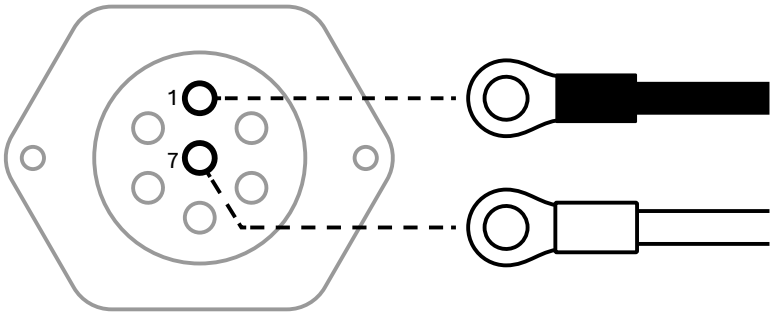

Contact Samsara support at www.samsara.com/support with any installation questions.